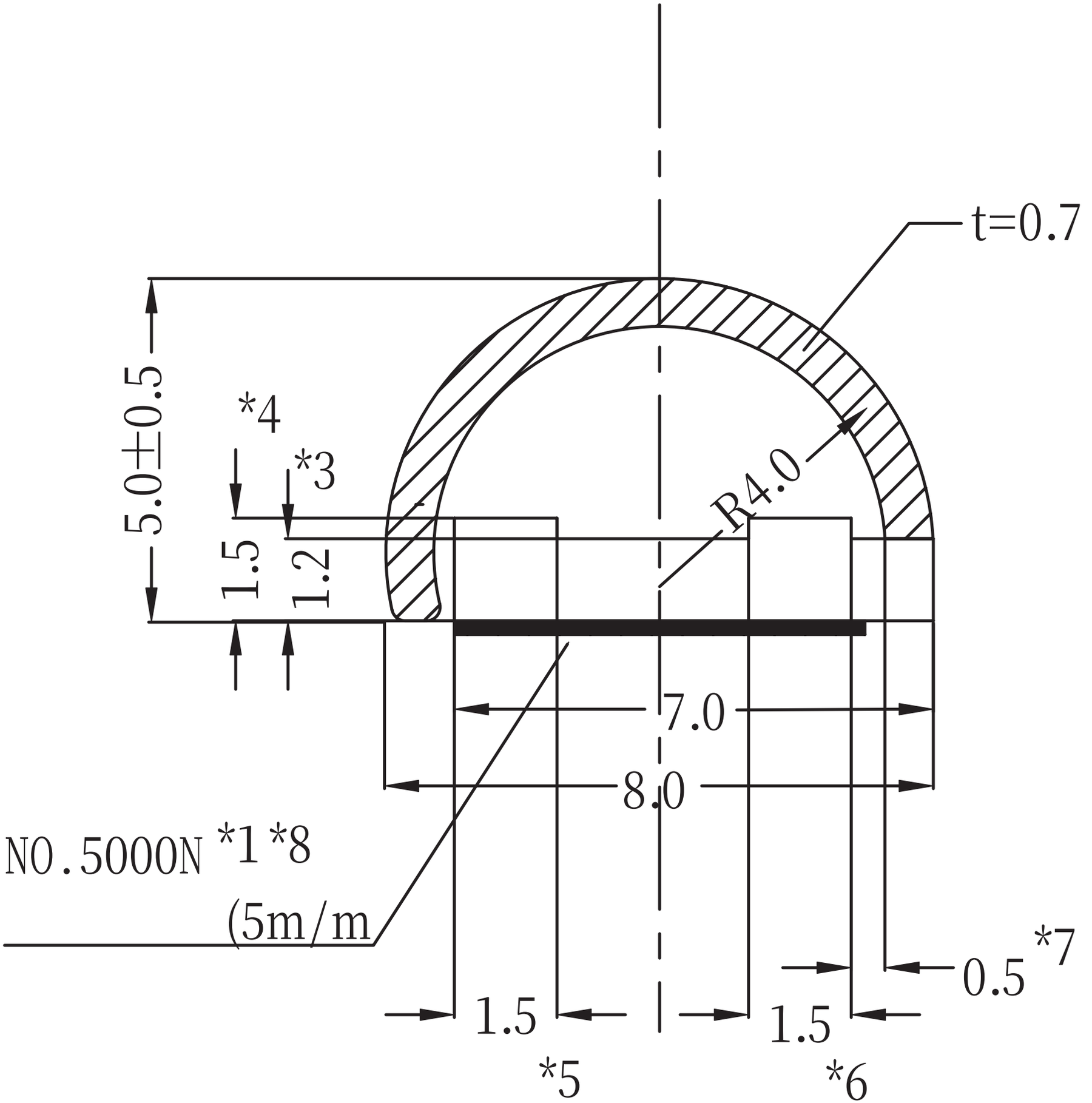
t=0.7
5.0±0.5
*4
*3
R4.0
1.5
1.2
7.0
8.0
NO.5000N *1 *8
(5m/m
0.5 *7
1.5
1.5
*5
*6